National Aeronautics and Space Administration

LDCM Spacecraft Status

Bill Anselm, LDCM Observatory Manager

June 23, 2009

data continuity mission

LDCM
LANDSAT

NASA GSFC / USGS EROS

www.nasa.gov www.usgs.gov

INTRODUCTION

- Spacecraft Context
- Implementation Status
- Schedule
- Spacecraft from a kit
- Launch support
- Summary

LDCM CONTEXT

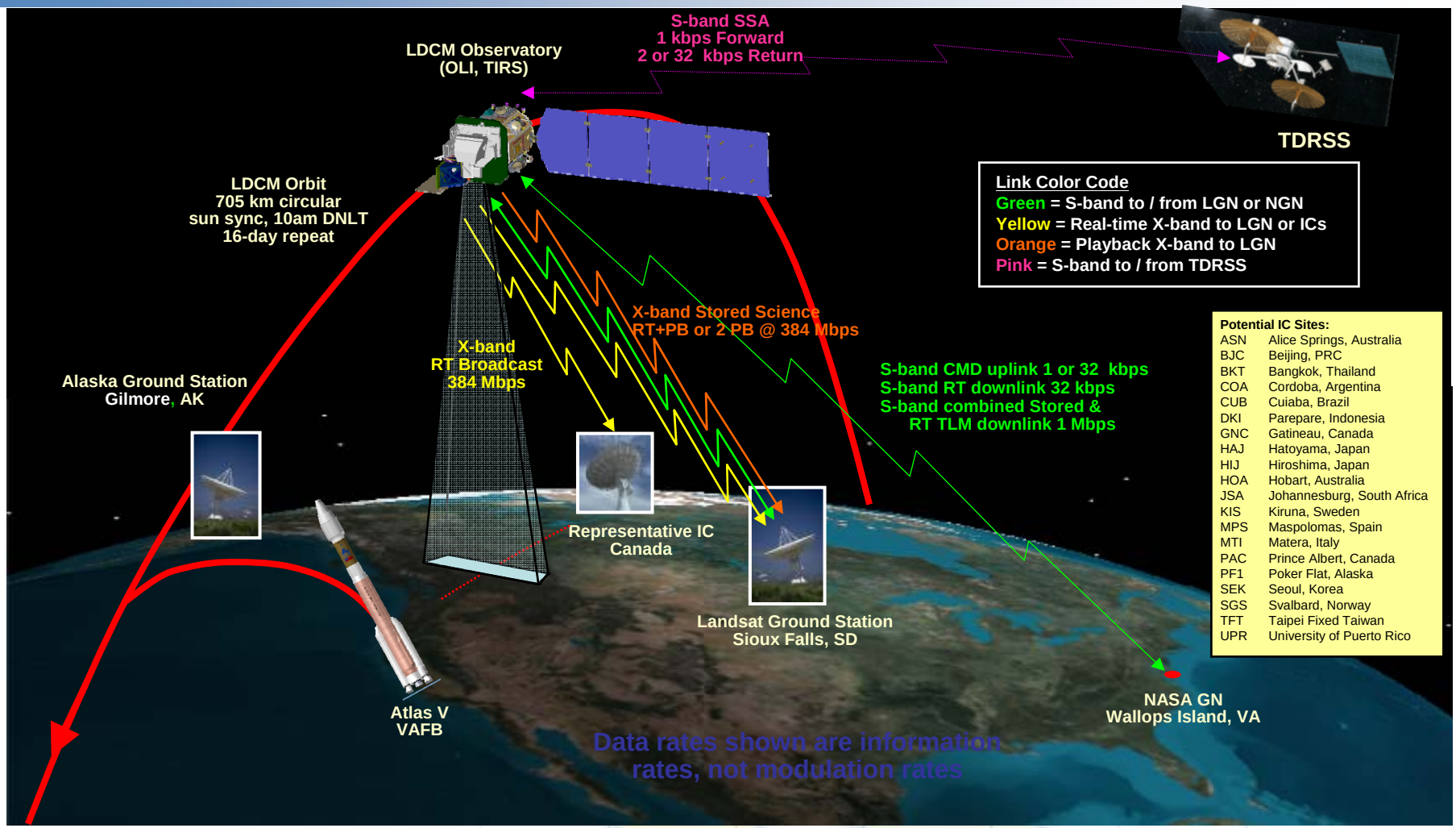

IMPLEMENTATION STATUS

- Spacecraft design is sound
- Effective management in place
- Highly talented and motivated team
- Well on the road for October CDR

IMPLEMENTATION

- Rapid Spacecraft Development Office
  - Unique “catalog-based” IDIQ contract
    - 8 Vendors; 18 Spacecraft
    - Selection is “rapid”; award-to-launch ~ non-RSDO
    - Fixed-price performance-based Delivery Order milestones
- D. O. Management
  - Admin: CDRLs, studies, milestones
  - Technical: analyses, margins, requirements compliance
- Deliverables:
  - Spacecraft/Observatory
  - Simulators (Interface, Observatory, Software Development)
  - Launch Support
  - Mission Operations Support

SPACECRAFT ROOTS

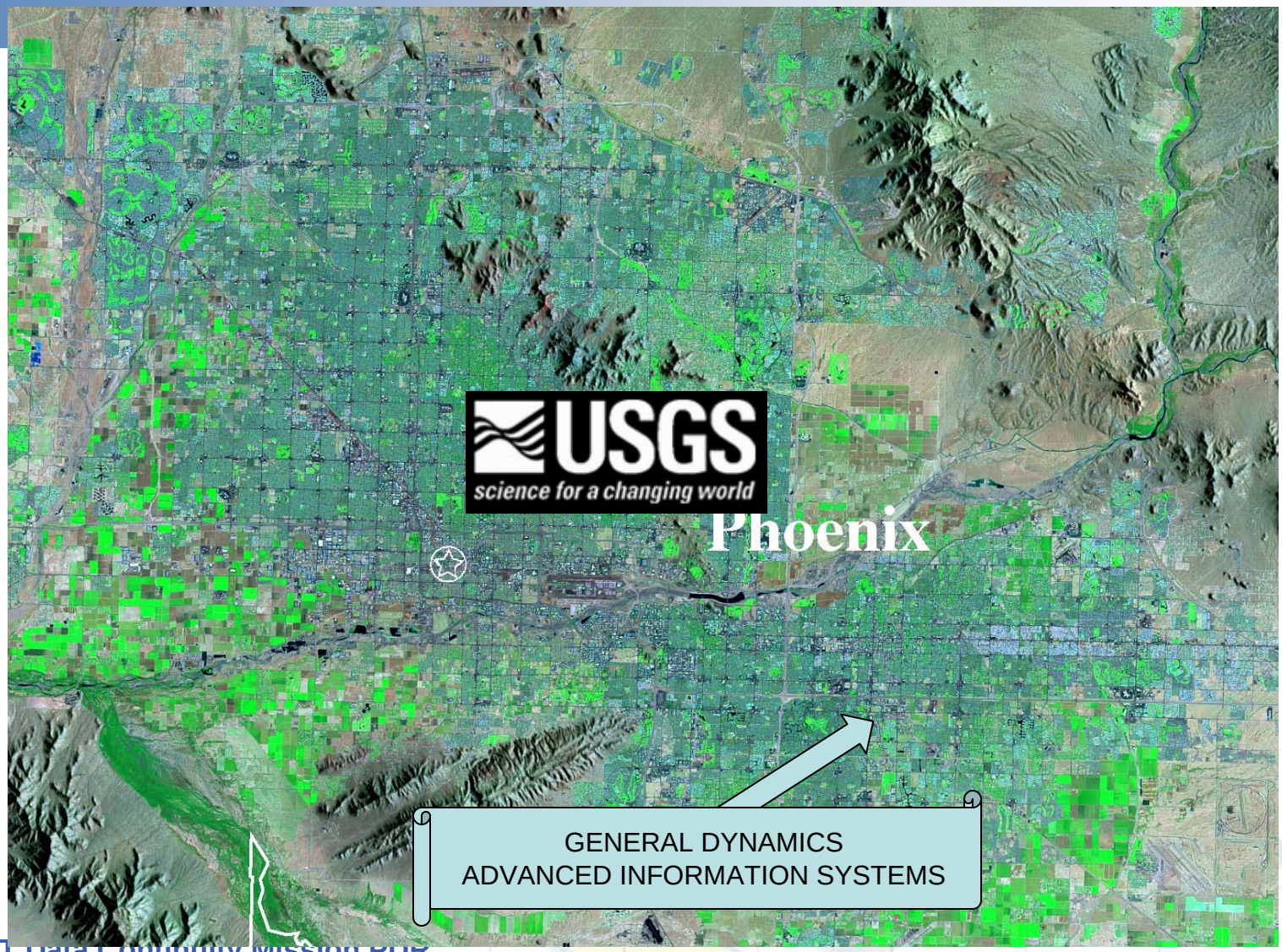

SPACECRAFT SCHEDULE

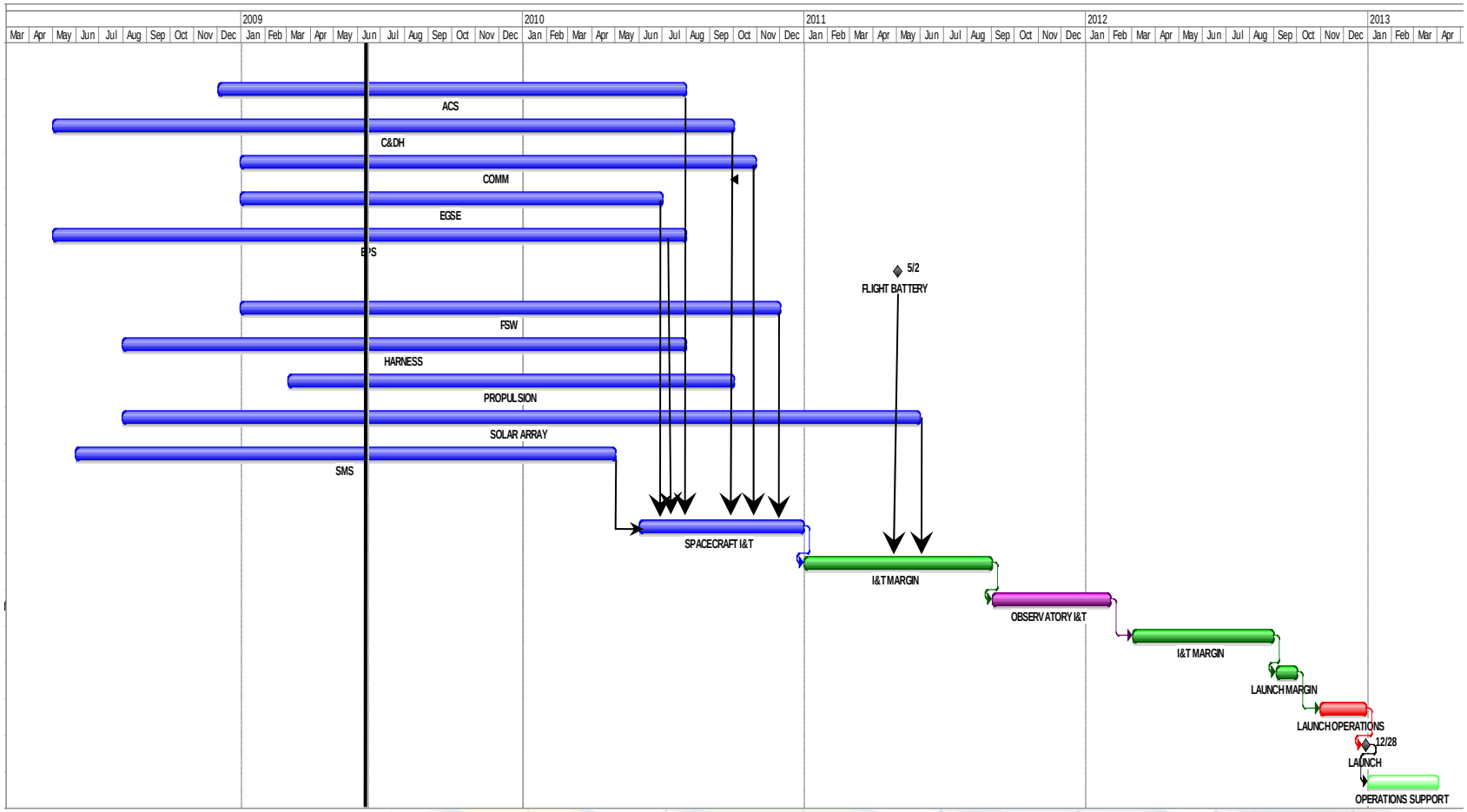

SPACECRAFT KITTING

Primary Structure Test Configuration

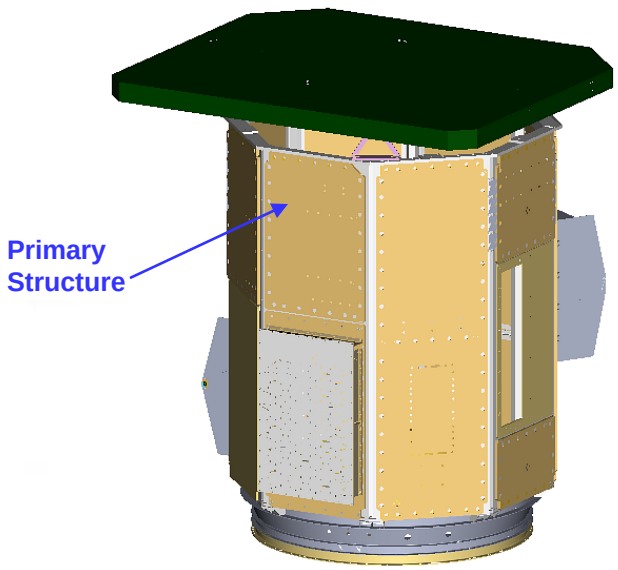

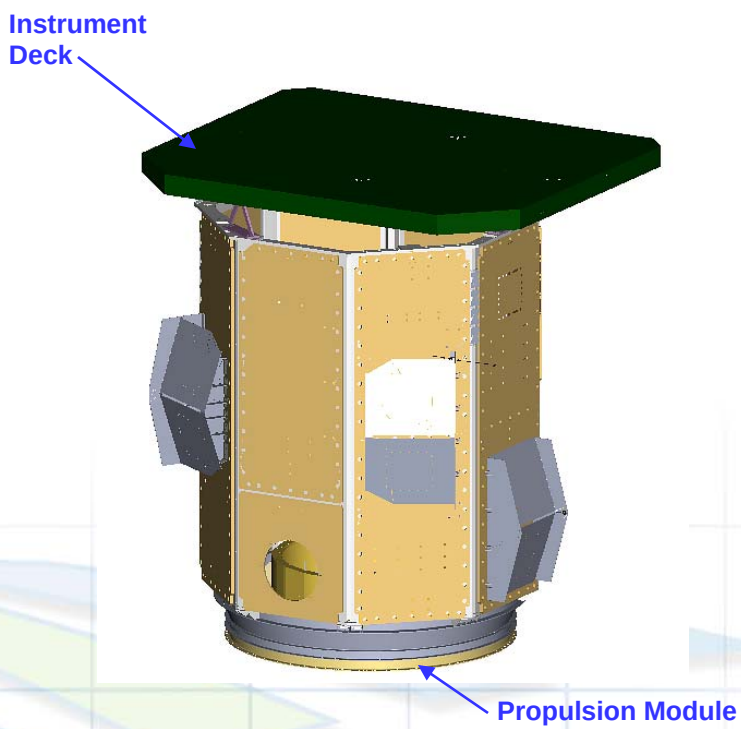

SPACECRAFT KITTING

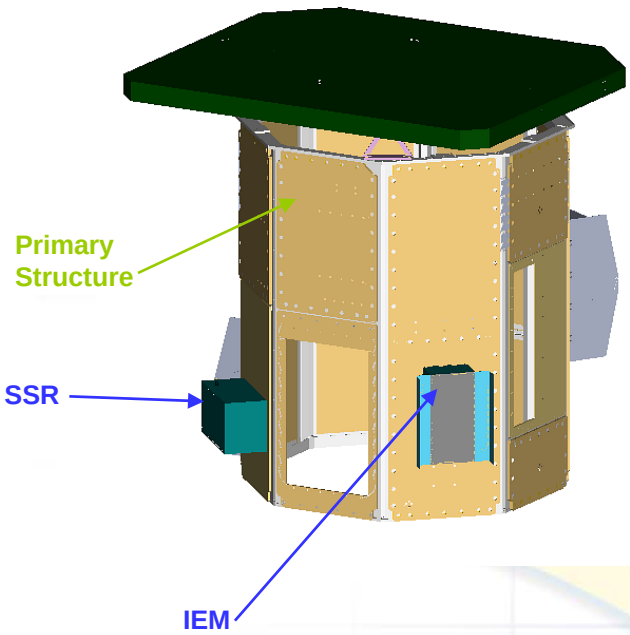

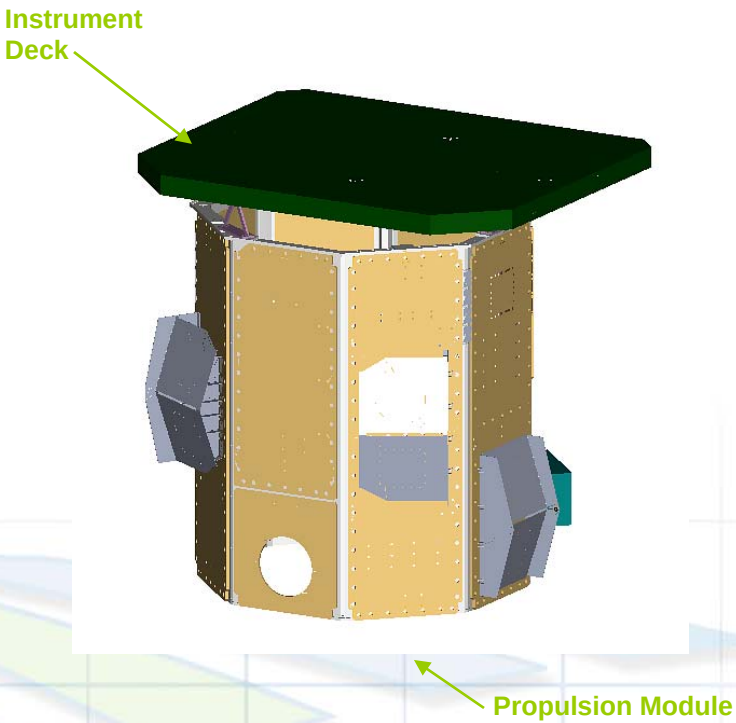

SPACECRAFT KITTING

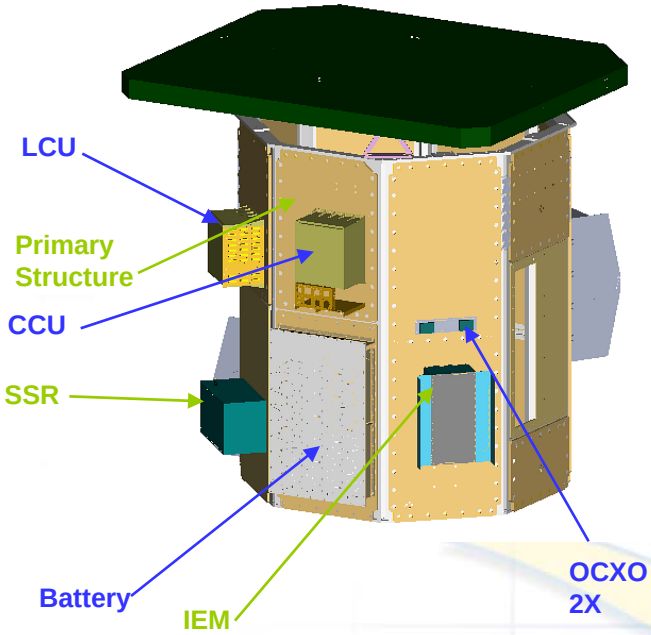

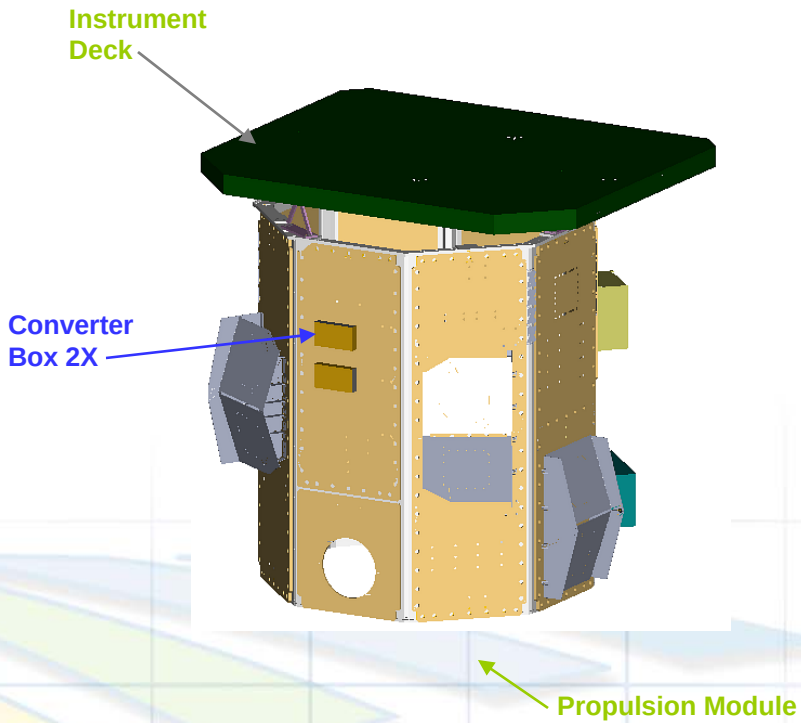

SPACECRAFT KITTING

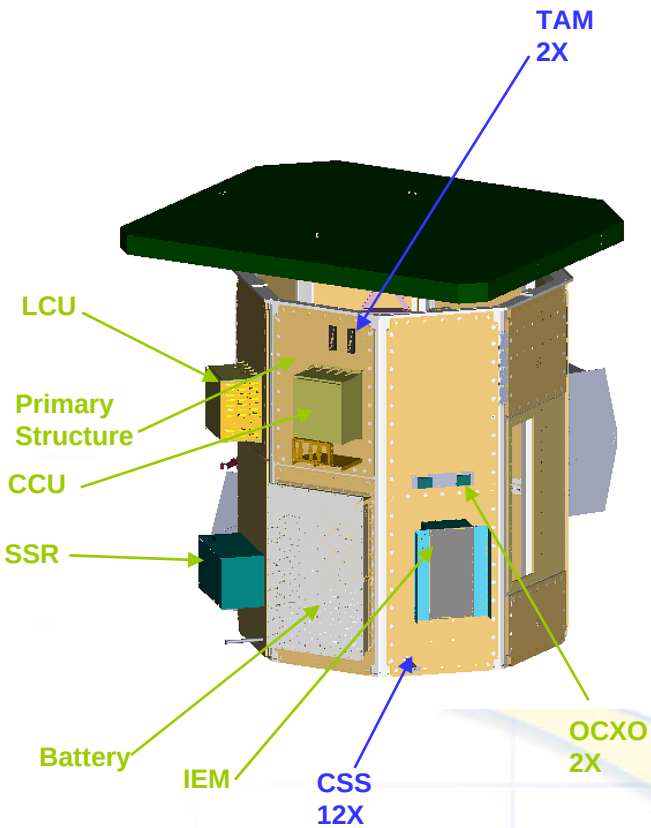

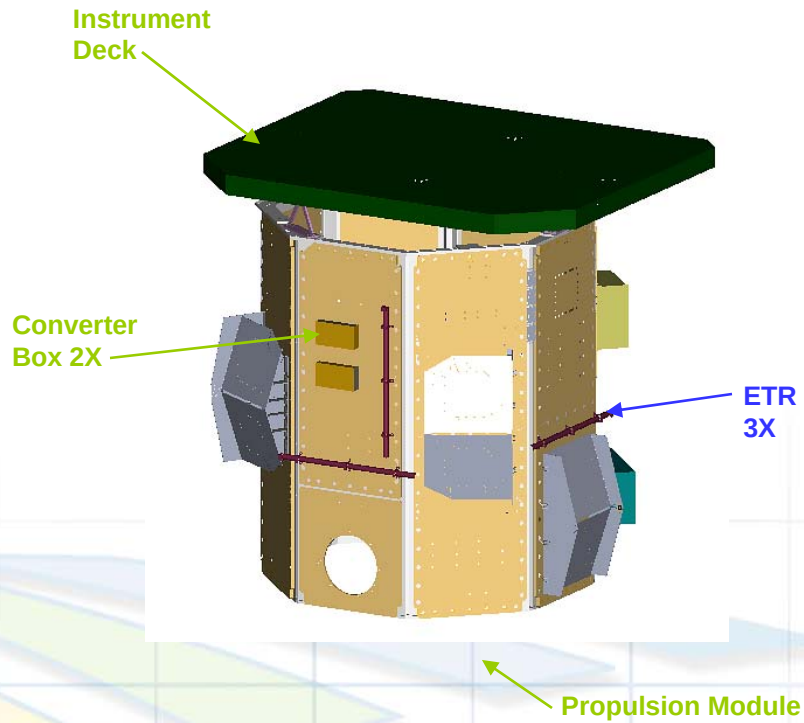

SPACECRAFT KITTING

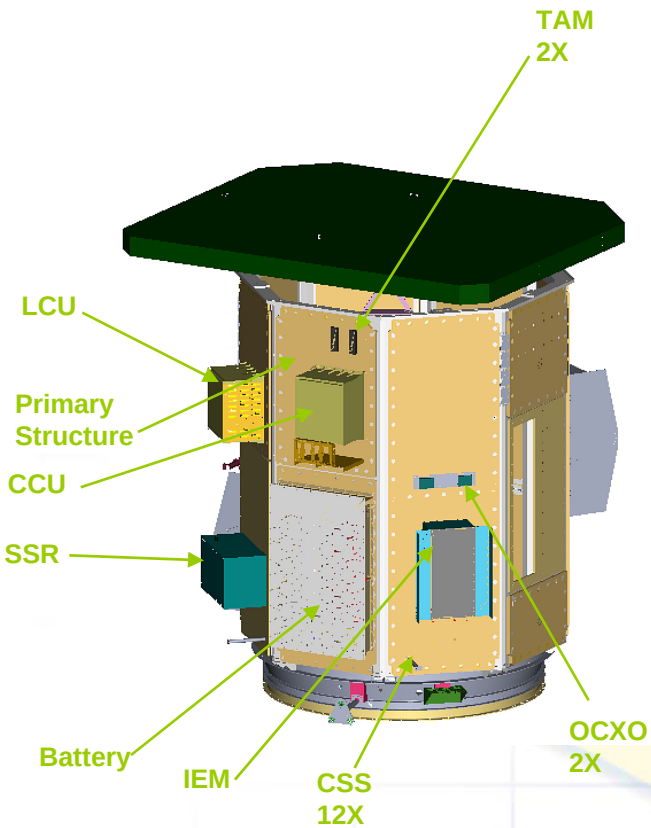

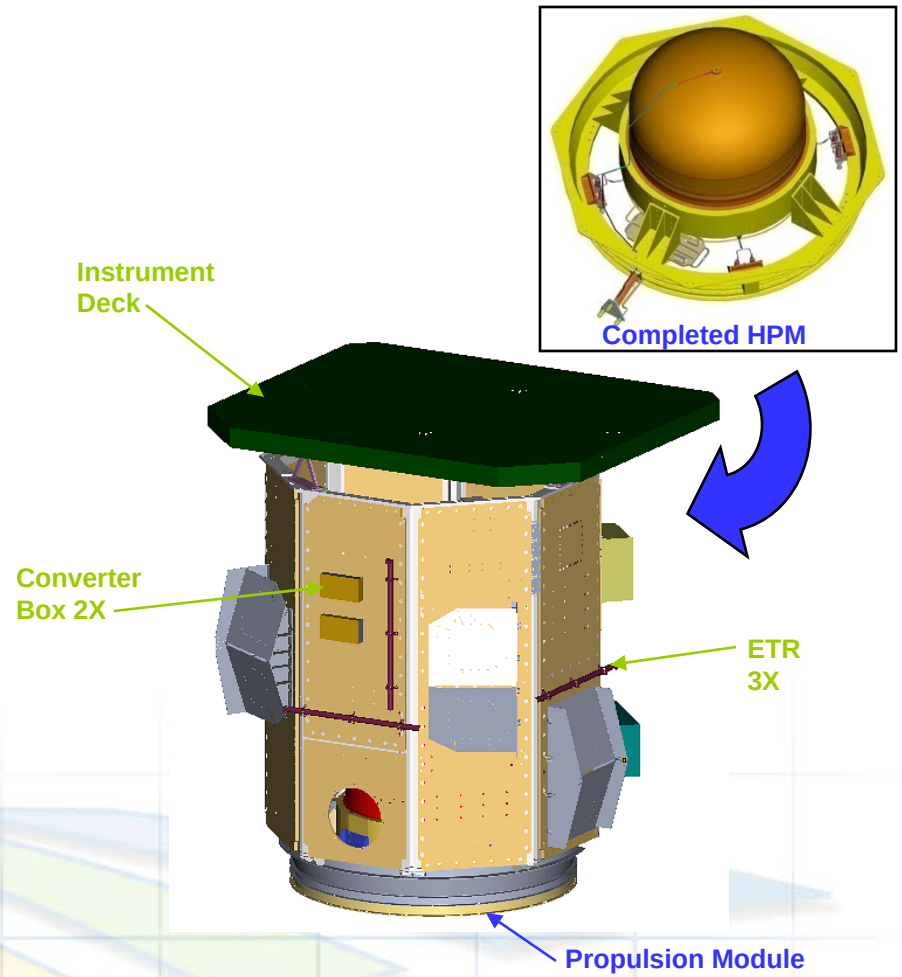

SPACECRAFT KITTING

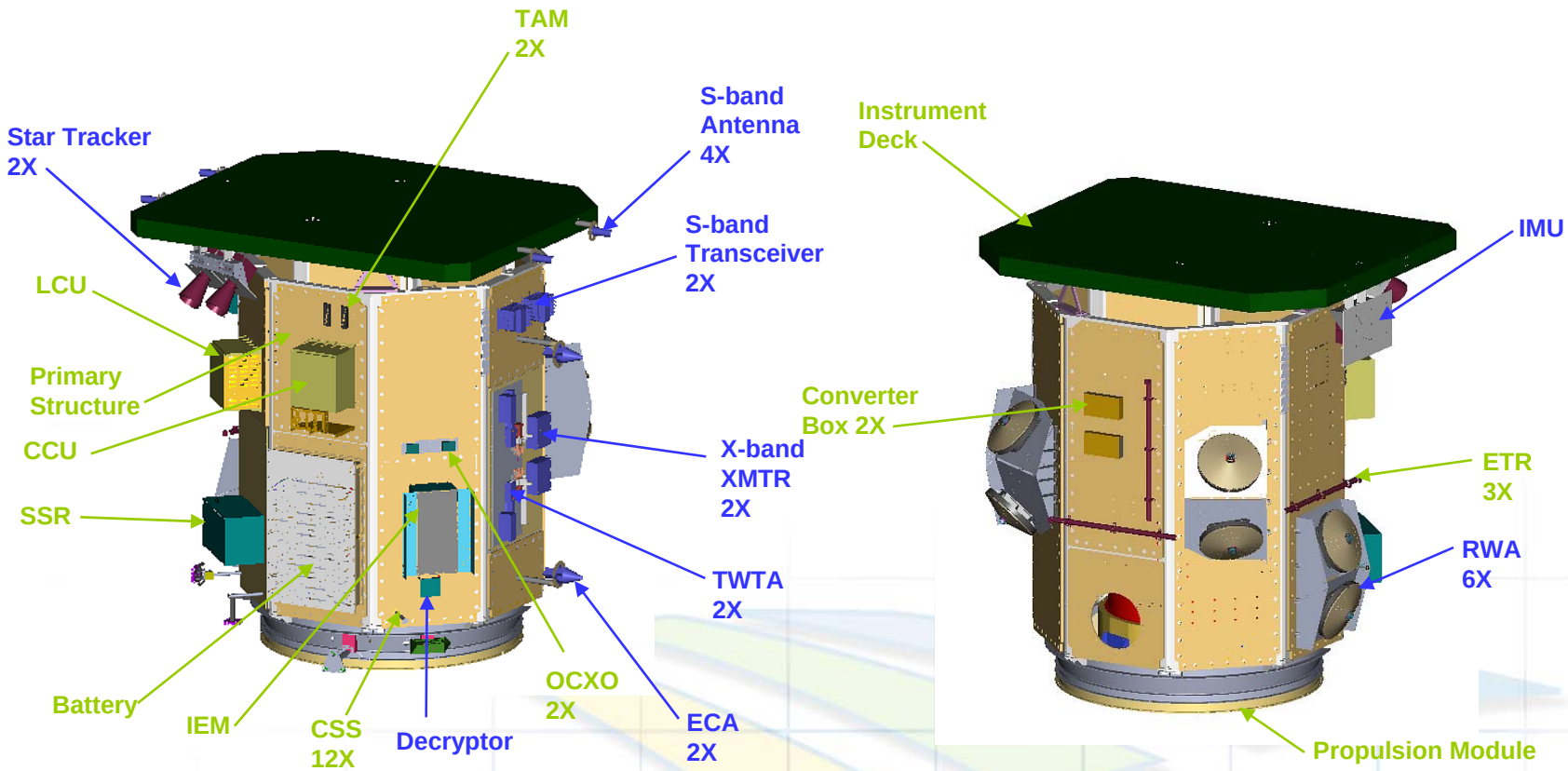

SPACECRAFT KITTING

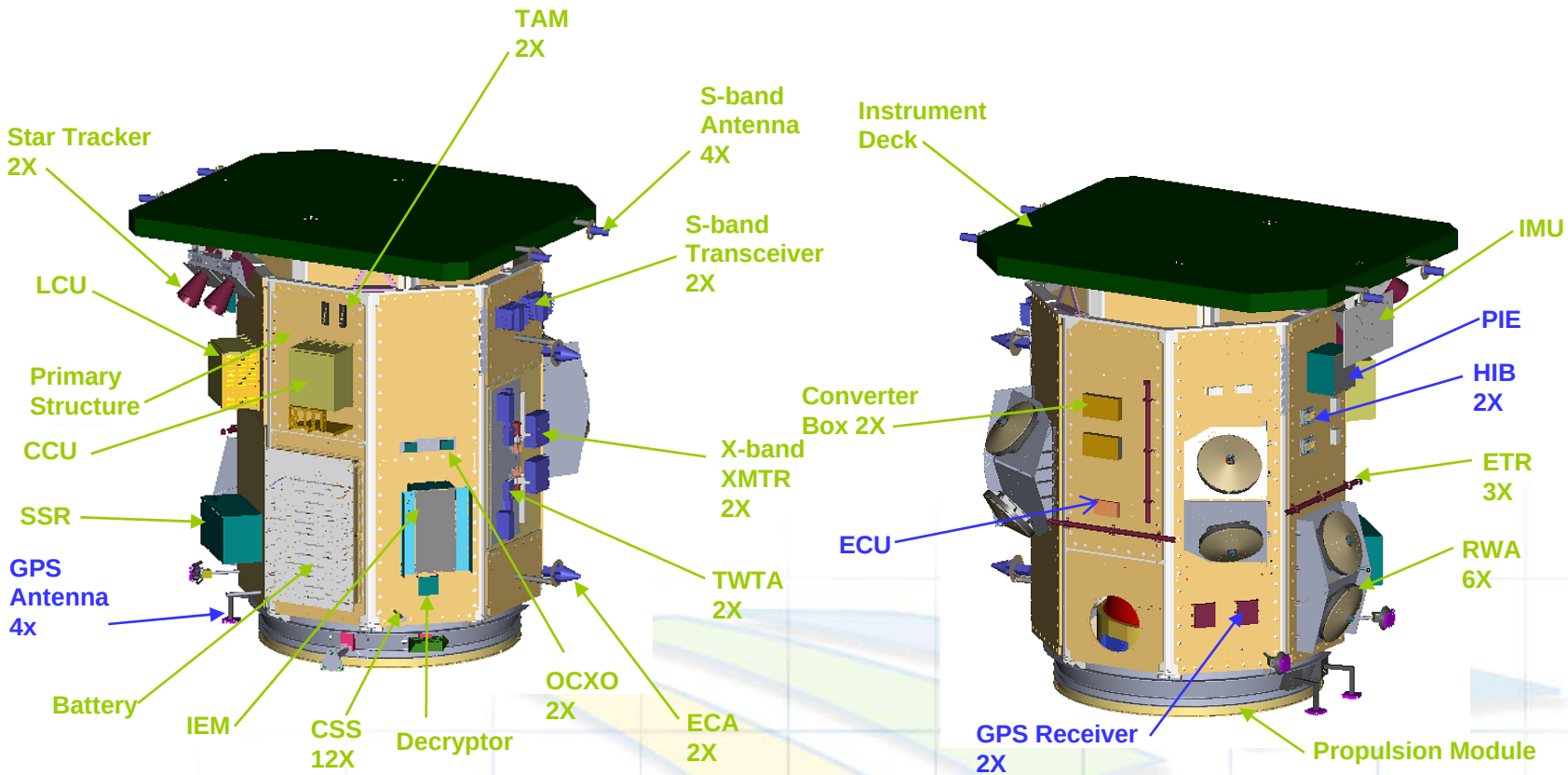

SPACECRAFT KITTING

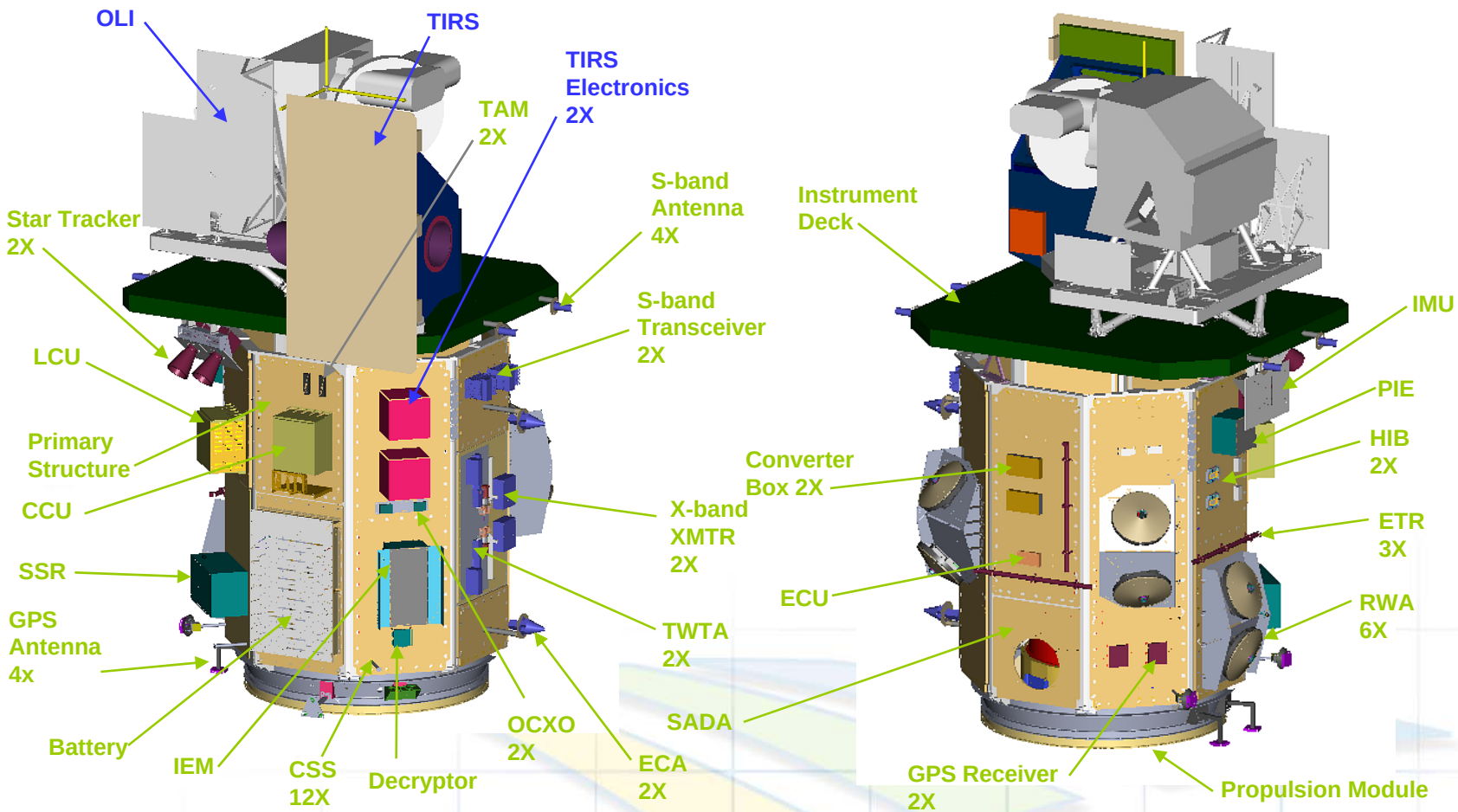

SPACECRAFT KITTING

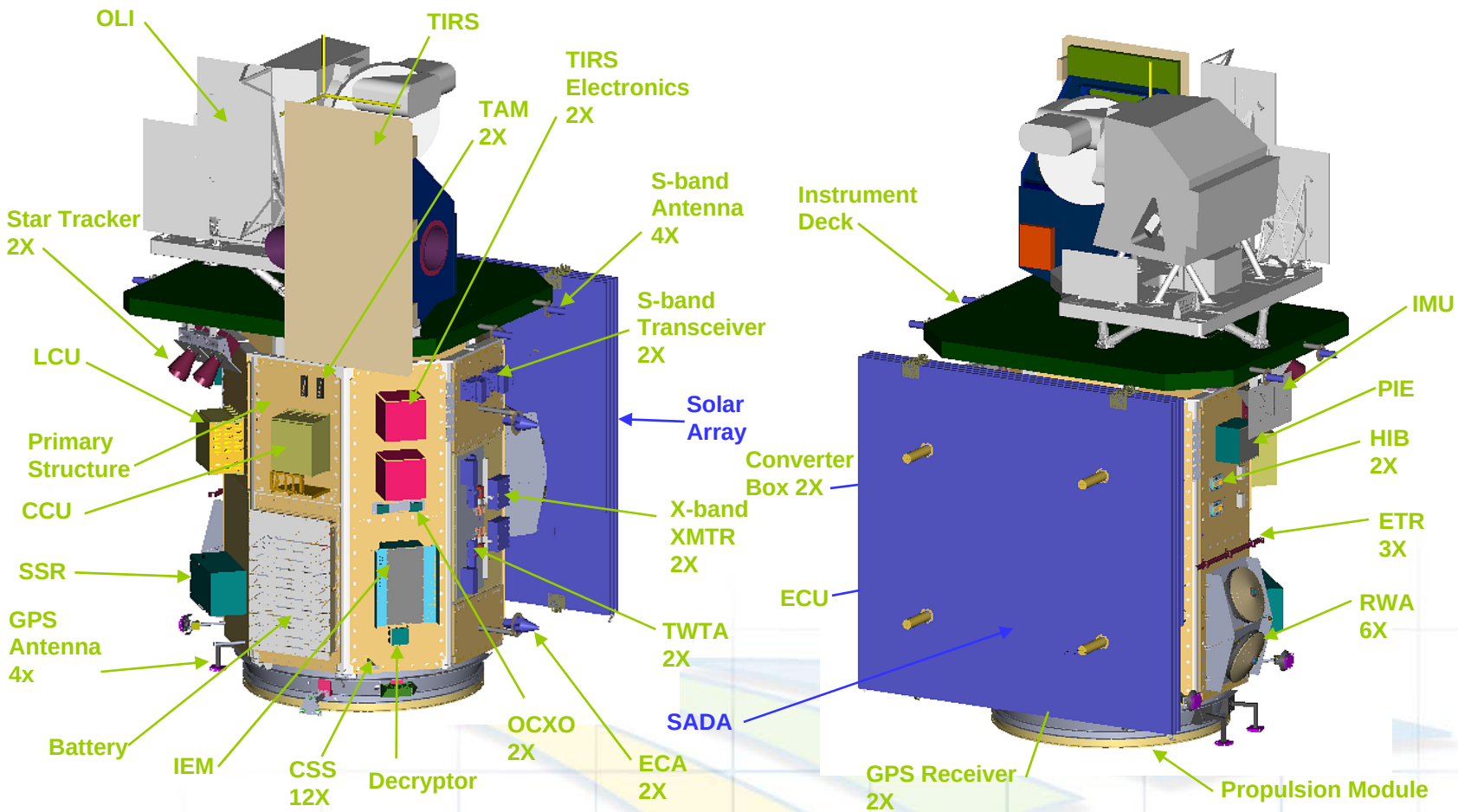

LAUNCH SUPPORT

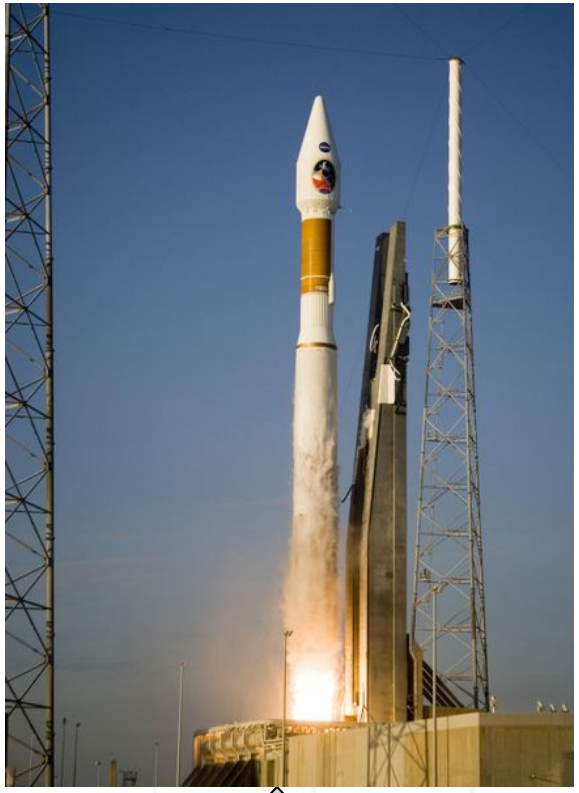

LDCM

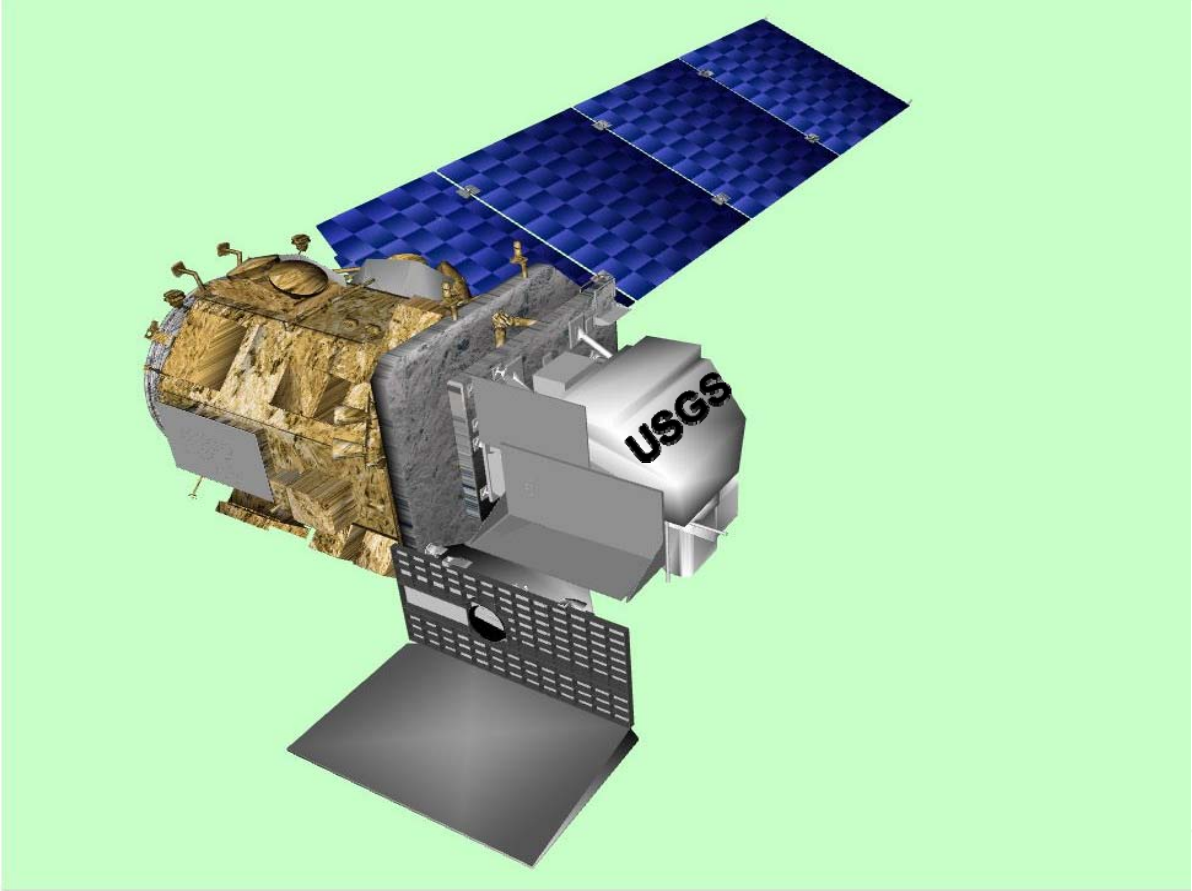

SUMMARY

- Design is sound
  - Good margins, buildable, testable, lots of heritage
  - Interfaces well covered
  - Simulators buy-down risk
- Management and execution sound
  - Documents, risks, schedule
- Planning sound
  - Progress monitored, good reserves
- Great team in place
- On to CDR!